Points 6 Published

Details Questions

Show Question Details

Question 1.2 pts

Consider the following pedigree from a human family containing a male with Klinefelter syndrome (a set of abnormalities seen in XXY individuals; indicated with a shaded box). A and B refer to codominant alleles of the X-linked *G6PD* gene. The phenotypes of each individual (A, B, or AB) are shown on the pedigree. Indicate if nondisjunction occurred in the mother or father of the son with Klinefelter syndrome.

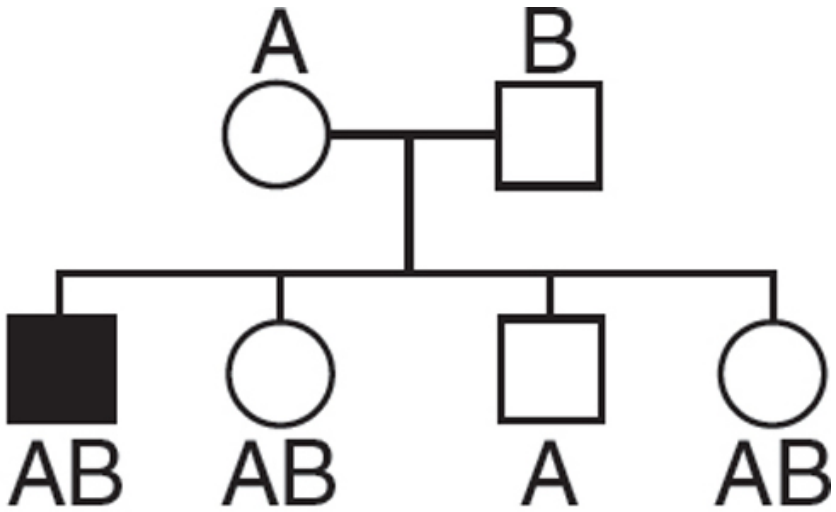

mother
father
cannot be determined

Question 1.2 pts

Did the nondisjunction occur in the first or second meiotic division?

first
second
cannot be determined

Question 1.2 pts

In marsupials like the opposum or kangaroo, X inactivation selectively inactivates the paternal X chromosome. What is the probability of coat color for daughters born to a female marsupial homozygous for a mutant allele of an X-linked coat color gene when mated with a male hemizygous for the alternative wild-type allele of this gene?

100% wild-type coat color
100% mutant coat color
50% wild-type coat color, 50% mutant coat color

Question 1.2 pts

What is the probability of coat color for daughters born to a male marsupial hemizygous for a mutant allele of an X-linked coat color gene when mated with a female homozygous for the wild-type allele of this gene.

100% wild-type coat color
100% mutant coat color
50% wild-type coat color, 50% mutant coat color

Question 1.2 pts

How one X is chosen to express *Xist* is unknown. One clue to the choice mechanism lies in another gene in the XIC called *Tsix*, which is transcribed only from the X chromosome that will remain active. *Tsix* overlap *Xist* and is transcribed in the opposite direction, as shown in the figure below. *Tsix* produces a long noncoding RNA whose sequence is complementary (antisense) to that of *Xist*, explaining its name ("Xist" backwards is "Tsix"). *Tsix* expression from the future active X prevents *Xist* expression from that X chromosome.

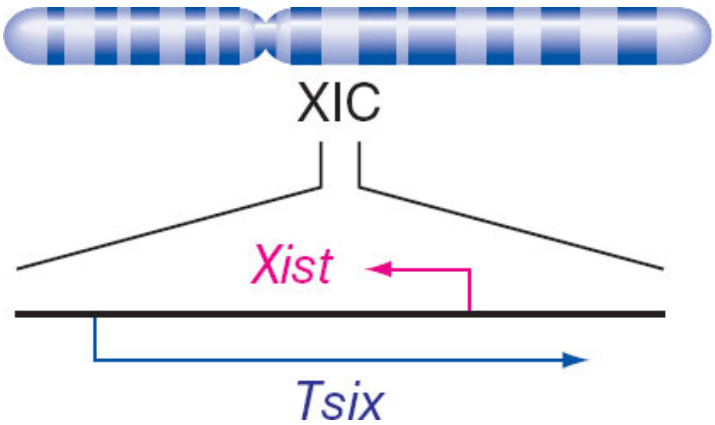

Suppose a female mammal has one normal X chromosome and one X chromosome that has a mutation preventing expression of the *Tsix* RNA but allowing expression of the *Xist* RNA. In the cells of this female, which X chromosome would be more likely to become a Barr body?

Normal X chromosome
X chromosome with the mutation in Tsix

+ New Question + New Question Group Find Questions

Notify users this quiz has changed

Cancel Save